Part Design تمرین محیط

Material: Aluminium
Mass: 0.515 kg

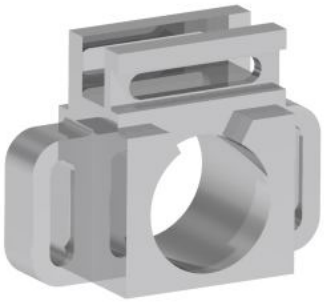

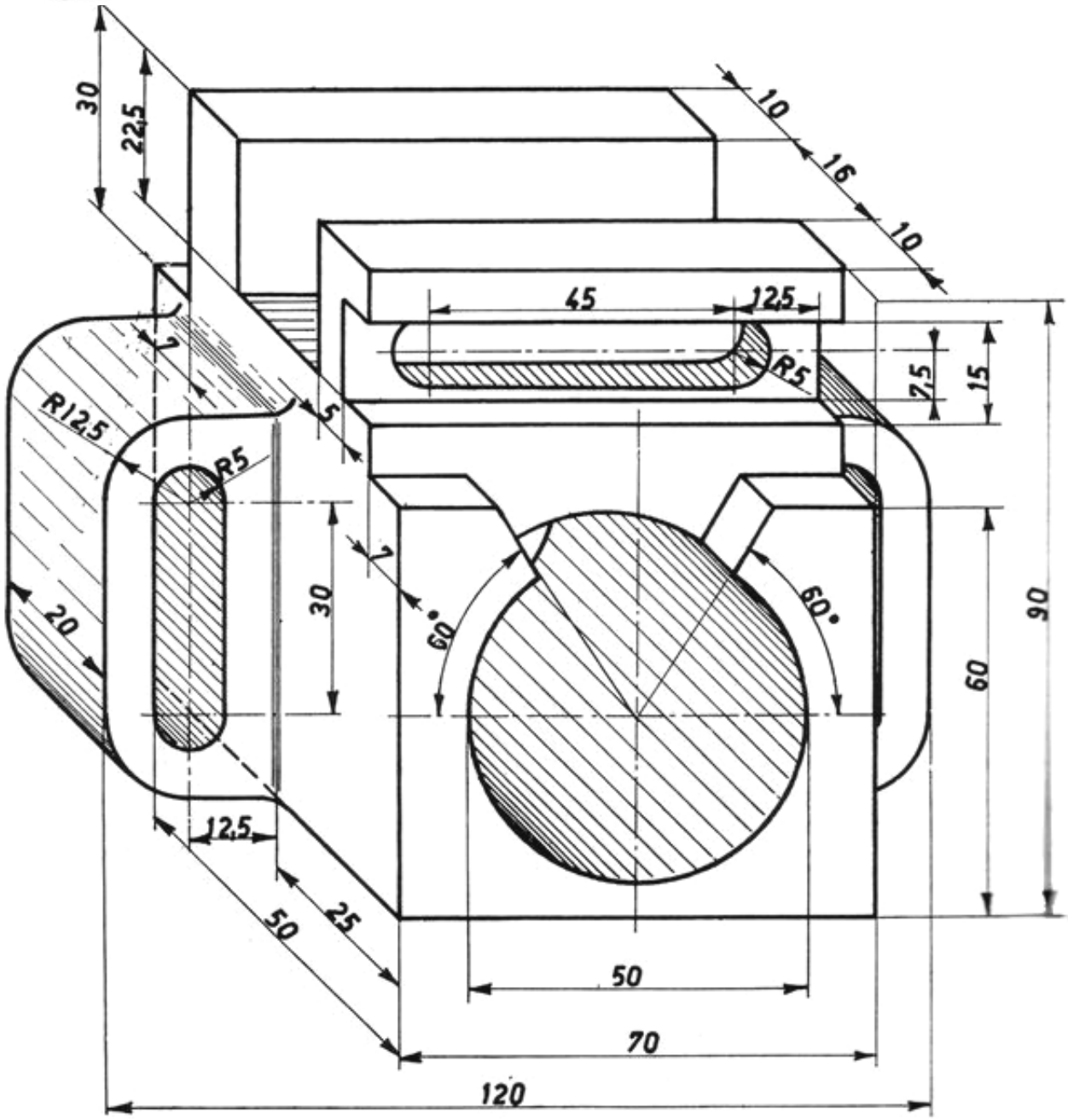

FILLETS R2.5 UNLESS SPECIFIED OTHERWISE

Copyright©2006 2011 www.CATIA.ir All rights reserved